Dani Scaccia

Lighting Through and Algae Façade

Abstract:

With the new use of Algae as part of bio-reactive façade systems, there is an opportunity that it can be helpful to the indoor air quality and part of a closed loop system that supports a building as a renewable source of energy. The concern with the system is the amount of light a fully grown bio panel would block from the inside perspective of the building occupant. Would the fully grown algae be too dense to cover the entire window and would need to able to open and close to adjust to the amount of daylight wanted within the space?

Introduction:

Algae façade systems have become a new and rather interesting research topic in the past several years. There is a concern that the world is going to die at any moment because of people's excessive use of fossil fuels, growing cities, and the environment that is changing because of these things. In an effort to try and take back control, there has been a movement for energy efficiency and alternative fuel sources within the built environment.

Algae has been a more recent contender to this trend for the built environment, being a fuel source and a shading device, it can house multiple purposes while still contributing to the positive aspect everyone is trying to achieve with the environment.

With the new use of Algae as part of bio-reactive façade systems, there is an opportunity that it can be helpful to the indoor air quality and part of a closed loop system that supports a building as a renewable source of energy. The concern with the system is the amount of light a fully grown bio panel would block from the inside perspective of the building occupant. Would the fully grown algae be too dense to cover the entire window and would there need to an operable system to adjust to the amount of daylight wanted within the space?

These questions peak interest in the form of a greenhouse. Greenhouses are a new staple as the growing population is looking for alternative methods to greenspace without having to leave the city environment or give up building space. Greenhouses are very temperamental as the right temperature and light needs to be maintained within the space to keep the vegetation within thriving. With an algae façade system as the primary frame work that makes up a greenhouse would there be enough sufficient light to allow the plant growth, that is what this method is trying to find out.

Background:

Usually, when talking about the air quality people will automatically think about the outdoors. The urban city covered in smog, full of cars and bustling people. However, there is another air quality that is of concern, the indoor air. Current code standards set up by ASHRAE specifies the rate of change an air space needs during the design and construction phase of a project. In an effort to increase the efficiency of buildings we have tightened our air infiltration and confined ourselves within a space that is not always healthy. In some studies, the EPA has found that there can be 2 to 5 times more air pollutant particles inside than outdoors and in some cases as high as 100 times.

In an effort to combat such pollutants some designers have taken a new approach to façade systems incorporating bio facades as a means of helping with the air problems, and still maintaining the concern for the efficiency within the building. SolarLeaf is a building project in Hamburg during 2013. It

is the first bio-reactive façade to use algae as a shading device and a form of renewable energy and solar thermal heat. The closed system uses the heat from the water solution the algae grow in for temperature control. In addition to this the algae biomass is harvested and used to produce energy. This closes the loop allowing the CO2 burned during the process to be filtered back into the algae system. Algae is an effective system because of its CO2 sequestering rate. It is a natural product that only needs CO2 and sunlight to grow and become effective. In other studies with this technology a company called photo.Synthetica is looking at the use and expansion of different types of algae. Their main projects are currently temporary, but they have explored illumine cent algae in their studies and have also found that 2sqm of their growth system is equivalent to the CO2 captured by a single full adult tree. Both reduce 22kg of CO2/yr, but within the city environment it makes it difficult to have large quantities of trees, where several buildings with this cladding system would be much more effective.

Dr. Kyoung-Hee Kim of UNC Charlotte is currently working on a solar study using an algae façade system. She is testing the functionality of an algae façade as a solar shading device. Her work consists of panel design, leak proofing the system and then running test models on the development and efficiency of the system. Dr. Kyoung-Hee is working now to prevent a better built environment with this research. In her studies she has found that the built environment has a lot of responsibility to issues caused by how we operate them currently. For these reasons this type of research is important to move forward with.

Fabrication strategy and Methodology:

In order to test the allowable light that an algae panel will allow to pass through it, the system will need a testing apparatus that is capable of adaptability and sturdiness in the design process. The apparatus chosen for this study was a one-foot cube that would be held together with thumb screws and have the capability to be torn apart as needed. The detailing to the bottom shows how the box is held together on the inside with the upper and lower panels having bracing within it. This bracing then holds on to the front and side panels of the cube and allows for a single or double panel to be removed at a time as to what is necessary for the experimentation.

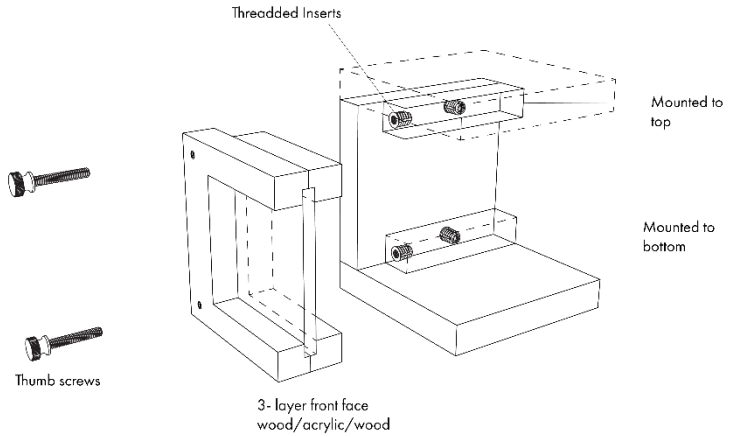

The panel itself was originally supposed to be an operable system, manually, but still able to open and close using a design created from a studio greenhouse that looked at a subdivided hexagon as a means to communicate the effectiveness of the system designed. This fabrication method would also look into a means of using 3d printed parts to create the frame and subframe of the panels. There is a significant environmental concern when it comes to spilled algae. Algae has been known for creating blooms within areas that are rich in phosphorus and nitrogen. Run-

off from agriculture and manicured lawns can add these chemicals into the water supply creating high areas of density helping to contribute to blooms that are not common. Not all algae are safe, when a bloom occurs it can be deadly to the sea-life that lives below the bloom creating a dead zone. Florida is well known for having such a harmful alga bloom even calling it the “Red Tide”. The algae used in the façade systems are different than that found in the red tide, but it can still be harmful if not treated with precaution.

This means that before any testing can occur with the algae panels, there needs to be a leak proof method created to use this system. The original fabrication relied on 3d printed models that would house a bag sealed with the algea on the inside. However, the scale of the model being so small, only allowed for a smaller look at the 3d print, and the course material of the print would cause the bags to leak during the trial phase of the experimentation. This along with the growing scope of a working panel system became to large of a problem to resolve in testing.

It was at this point that the project took another turn and simplified to looking only at the light and the algae. Using the same predetermined cube as before, the cube was tipped upwards from the original fabrication method, adaptability, with the light shining down, as though the sun and building had tilted on its access but where still in relation to one another. From there a 6” by 6” by 3” tall plastic contained was placed on the window as an open face algae pool. This pool was the holder used to test the algae. In order to understand the difference in light, the density of this algae was changed in increments of 25% starting at 100% dense and moving to 0% dense. The density was changed based on the algae solution to water ratio that was placed in the pool. Using 2cups as the means of measurement changing it by ½ cup increments for each test allows the density to decrease and the changes within the algae to be shown.

As algae starts out as very thin the change in density will only be performed with fully grown algae. The algae used in the experiments will have been supplied with a CO2 air pump and placed in direct sunlight for the course of a minimum of 4 weeks to allow for proper and complete growth. The growth can be determined by the color change within the algae itself. When first stating the water will look slightly cloudy with small amounts of green, as though the pool filter has been broken for a week. Where the fully grown algae will look as though you are uncovering the pool for the first time since the winter months ended. The color is very dark and hard to see through, as indicated in the photo to the right.

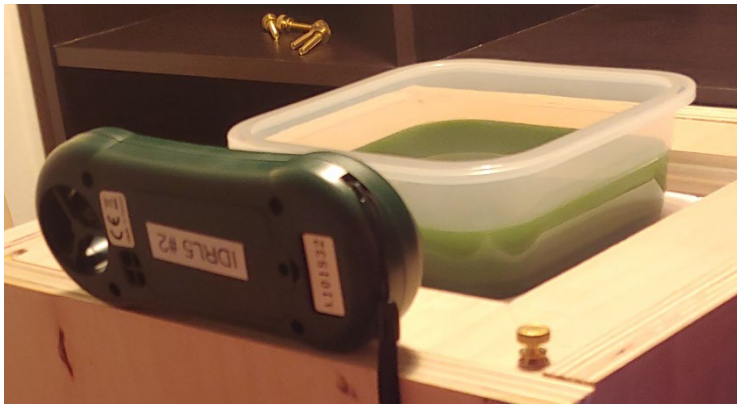

In order to create a base mark for the project 2 controls were done to see the differences in the scale of reading that the sensors of the project would be using. For this study the TSL2951 sensor was chosen. This sensor is specifically a light sensor that records the lux and visible light which is the spectrum wanted for this study. However, it will also need the addition of TCA9548A sensor. This sensor

is called a multiplex, which means that it is able to name the TSL2951 sensor under different names that the computer can recognize. All TSL2951's has the code 0x70 as the name. This name is only changed with applied through the TCA9548A, which allows up to 8 different named sensors to be operating at the same time. This allows for there to be 2 TSL2951's in the experiment, one at 1"back from the window and the other at 7" back from the window to allow a difference in reading based on difference from the window.

Data Test 1, Differences in Sensor Recording						
	Sensor #1	Sensor #1		Sensor #2	Sensor #2		Meter
Line Reading	Visible	Lux		Visible	Lux		Lux
1	466	53.535		425	43.931		85
2	467	53.603		426	43.942		
3	468	53.671		424	43.595		
4	466	53.454		424	43.856		
5	462	53.101		420	43.487		
6	460	53.128		416	43.185		
7	459	53.142		416	43.317		
8	456	52.694		414	43.100		
9	455	52.709		413	43.158		
10	452	52.591		408	42.783		
Average	461.1	53.163		418.6	43.435		85

Because there are 3 sensors working in collaboration, the system will have the first control test the sensors outside of the apparatus against that of a multimeter that is able to also measure the LUX of the current environment. This will set the base line of difference between the sensors and meter prior to starting the experiments. The second control, set the box, light, and all sensors in the environment that it would be in for the duration of the testing. This box did not move change or be touched during the duration of the testing. This prevents any difference in the light recording to be reduced to primarily to the algae, from tests of the method and knowing electricity is fluctuating that reading can vary slightly.

Expected Results and Discussion:

The expected results of the testing are to see that the apparatus has the lowest level of light when the algae is at 100% opacity. This conclusion can be drawn from the fact that algae blooms are known for being deadly in the ocean because they block out the sunlight to the lower areas creating dead zones. The concern with this type of system is the fear that it will not allow enough sunlight into the space. All current research is either allowing for viewing ports or movable systems to allow the occupants to see outside. After conducting the experiments in the methods above it became clear that the system could be tested several times using the method above. However, there was a concern from the reflectiveness of the materials for the testing. Water is known for being reflective, the sunburn at the beach is always worse the longer you spend in the water because of the light reflecting off of the water and back up onto the skin.

With the experiments I was conduction although the sensors weren't in the direct light the water was, and the longer I tested I wondered if the reflection of the water could have an adverse effect on the results of the study. Even the plastic container could have a different effect on the study, which is why the base line for the test using the control group was critical before running any test. There was also a strong concern for the movement of the light, and the fluctuation of the electricity in the light. Although the final results, displayed averages from 10 lines worth of data was that enough to solidify the

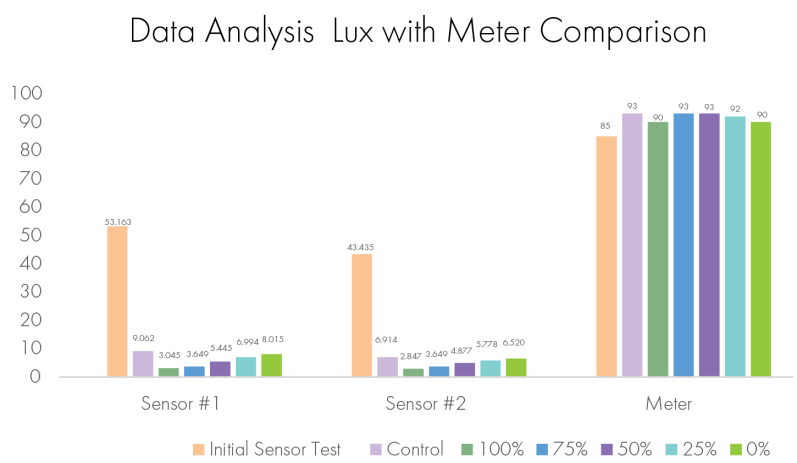

results. Not only that but the slightest vibration in the floor from entering and exiting the closet to change the water solution may have cause slight disruptions in the data as well.

The results of the tests were what was expected however there is just no guarantee with this data alone that the project has a conclusive factor towards the hypothesis of it needing to be an operable system.

Conclusion and Next Steps:

Overall, the experience of the testing has turned out to be a success. In the process of coming to the final conclusion there were a lot of things that had changed, been modified, and just plum never worked out for this project. The start of the project saw big ambitions, but as it turned out it was stating at the last block of the inverted pyramid instead of the first one. The first conclusion to draw from the experience is that the research needs to start on a smaller scale, the idea may be big but if it cannot be executed then there is a flaw within the system.

After reducing the scope of work down to only looking at the density of the algae it was clear the algae and water had an effect on the study and when compared to the control was only a third of the amount of light into the space at 100% opacity on Algae. It is satisfying to know that at least part of the hypothesis was correct in that the algae density would not allow light into the space. However, it cannot be said to be enough work to determine whether an operable system would be the most functional and strategic approach to this problem.

Moving froward with this research would first mean testing the Algae in the same situation to make sure that the data can be repeated, there may have been discrepancies in the first test and a trial system would need to be run first before moving on to the next step. After several trials with repeated results and to prove the methodology could be repeated, a new apparatus would need to be constructed. The new apparatus would test the growth of algae while surrounding a plant trying to thrive. This test would look at the capability of the plant to stay alive within a space surrounded by the algae growth. It will however, be using a system like a fish tank that is already capable of holding water.

After completing this trial, it is important to attack things one at a time with research, working on the three individual projects to completion to bring them together as a completed system. The ultimate goal would be to test a small working model of the greenhouse, large enough for a person to stand in.